Copeland Scroll™

Application Guidelines

Copeland Scroll™ Summit Series

ZB50KCE to ZB114KCE & ZB66K5E to ZB114K5E
ZF25K5E to ZF49K5E

EMERSON™
Climate Technologies

About these guidelines 1

1 Safety instructions 1

1.1 Icon explanation 1

1.2 Safety statements 1

1.3 General instructions 2

2 Product description 3

2.1 Common information about Copeland Scroll compressors 3

2.2 Nomenclature 3

2.3 Application range 3

2.3.1 Qualified refrigerants and oils 3

*2.3.2 Comparison between ZB*KCE and ZB*K5E compressors 4*

2.3.3 Application limits 4

3 Installation 5

3.1 Compressor handling 5

3.1.1 Transport and storage 5

3.1.2 Positioning and securing 5

3.1.3 Installation location 5

3.1.4 Mounting parts 5

3.2 Brazing procedure 6

3.3 Shut-off valves and adaptors 7

3.4 Suction accumulators 7

3.5 Screens 8

3.6 Mufflers 8

3.7 Suction line noise and vibration 8

4 Scroll compressors ZF*K5E for low temperature applications 9

4.1 ZF*K5E compressors with liquid injection 9

4.1.1 DTC valve specifications 9

4.1.2 Valve installation 9

4.1.3 Compressor or valve service 10

4.2 ZF*K5E compressors with vapour injection 10

4.2.1 Economized Vapour Injection technology (EVI) 10

4.2.2 Multiple compressor applications 11

4.3 ZF*K5E compressors with wet vapour injection 11

5 Electrical connection 12

5.1 General recommendations 12

5.2 Electrical installation 12

5.3 Terminal box 12

5.3.1 Motor windings 13

5.3.2 Protection devices 14

5.3.3 Crankcase heaters 14

5.4 Pressure safety controls 14
5.4.1 High pressure control 14
5.4.2 Low pressure control 14
5.5 Discharge temperature protection 14
5.5.1 ASTP Advanced Scroll Temperature Protection 14
5.5.2 Discharge line thermostat 15
5.6 Motor protection 16
5.7 High-potential testing 16
6 Starting up & operation 17
6.1 Strength pressure test 17
6.2 Tightness/pressure test 17
6.3 System evacuation 17
6.4 Preliminary checks – Pre-starting 17
6.5 Charging procedure 18
6.6 Refrigerant retrofit from HFC to HFO/HFC blends 18
6.7 Initial start-up 18
6.8 Rotation direction 18
6.9 Starting sound 19
6.10 Deep vacuum operation 19
6.11 Shell temperature 19
6.12 Pump-down cycle 19
6.13 Minimum run time 19
6.14 Shut-off sound 20
6.15 Frequency 20
6.16 Oil level 20
7 Maintenance & repair 21
7.1 Exchanging the refrigerant 21
7.2 Rotalock valves 21
7.3 Replacing a compressor 21
7.3.1 Compressor replacement 21
7.3.2 Start-up of a new or replacement compressor 21
7.4 Lubrication and oil removal 22
7.5 Oil additives 22
7.6 Unbrazing system components 22
8 Dismantling & disposal 23
DISCLAIMER 23

About these guidelines

The purpose of these application guidelines is to provide guidance in the application of Copeland Scroll™ compressors in users' systems. They are intended to answer the questions raised while designing, assembling and operating a system with these products.

Besides the support they provide, the instructions listed herein are also critical for the proper and safe functioning of the compressors. Emerson Climate Technologies will not guarantee the performance and reliability of the product if it is misused in regard of these guidelines.

These application guidelines cover stationary applications only. For mobile applications, contact Application Engineering as other considerations may apply.

1 Safety instructions

Copeland Scroll compressors are manufactured according to the latest European and US Safety Standards. Particular emphasis has been placed on the user's safety.

These compressors are intended for installation in systems according to the Machinery Directive MD 2006/42/EC. They may be put to service only if they have been installed in these systems according to instructions and conform to the corresponding provisions of legislation. For relevant standards please refer to Manufacturers Declaration, available on request.

These instructions should be retained throughout the lifetime of the compressor.

You are strongly advised to follow these safety instructions.

1.1 Icon explanation

	WARNING This icon indicates instructions to avoid personal injury and material damage.		**CAUTION** This icon indicates instructions to avoid property damage and possible personal injury.
	High voltage This icon indicates operations with a danger of electric shock.		**IMPORTANT** This icon indicates instructions to avoid malfunction of the compressor.
	Danger of burning or frostbite This icon indicates operations with a danger of burning or frostbite.	***NOTE***	This word indicates a recommendation for easier operation.
	Explosion hazard This icon indicates operations with a danger of explosion.		

1.2 Safety statements

- **Refrigeration compressors must be employed only for their intended use.**
- **Only qualified and authorized HVAC or refrigeration personnel are permitted to install, commission and maintain this equipment.**
- **Electrical connections must be made by qualified electrical personnel.**
- **All valid standards for connecting electrical and refrigeration equipment must be observed.**
- **The national legislation and regulations regarding personnel protection must be observed.**

Use personal safety equipment. Safety goggles, gloves, protective clothing, safety boots and hard hats should be worn where necessary.

1.3 General instructions

WARNING
System breakdown! Personal injuries! Never install a system in the field and leave it unattended when it has no charge, a holding charge, or with the service valves closed without electrically locking out the system.
System breakdown! Personal injuries! Only approved refrigerants and refrigeration oils must be used.

High shell temperature! Burning! Do not touch the compressor until it has cooled down. Ensure that other materials in the area of the compressor do not get in touch with it. Lock and mark accessible sections.

CAUTION
Overheating! Bearing damage! Do not operate compressors without refrigerant charge or without being connected to the system.

CAUTION
Contact with POE! Material damage! POE lubricant must be handled carefully and the proper protective equipment (gloves, eye protection, etc.) must be used at all times. POE must not come into contact with any surface or material that it might damage, including without limitation, certain polymers, eg, PVC/CPVC and polycarbonate.

IMPORTANT
Transit damage! Compressor malfunction! Use original packaging. Avoid collisions and tilting.

2 Product description

2.1 Common information about Copeland Scroll compressors

The Scroll compressor has been under development at Emerson Climate Technologies since 1979. It is the most efficient and durable compressor Emerson Climate Technologies has ever developed for air conditioning, refrigeration and heating applications.

These application guidelines deal with vertical single Copeland Scroll compressors ZB50KCE to ZB114KCE & ZB66K5E to ZB114K5E for medium temperature refrigeration applications, and ZF25K5E to ZF49K5E for low temperature refrigeration applications.

These compressors have one scroll compression set driven by a three-phase induction motor. The scroll set is mounted at the upper end of the rotor shaft of the motor. The rotor shaft axis is in the vertical plane.

2.2 Nomenclature

The model designation contains the following technical information about the standard and vapour injection compressors:

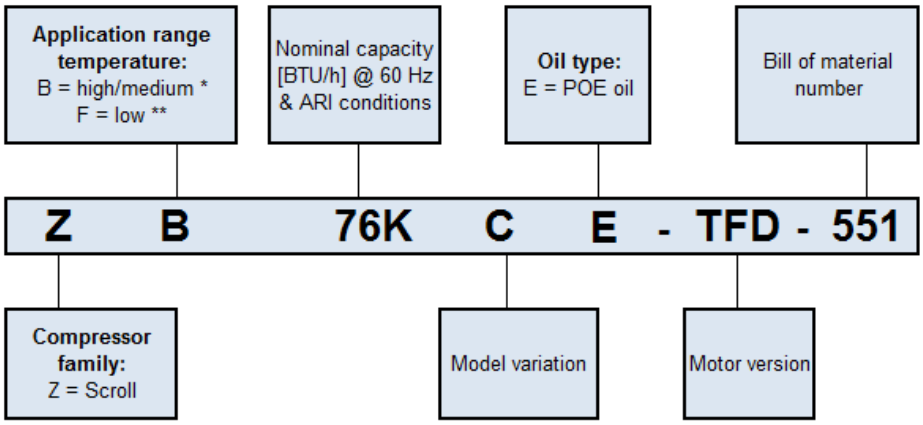

*** ARI Conditions high/medium temperature:**

Evaporating temperature ..... -6.67°C	Liquid sub-cooling 0K
Condensing temperature ..... 48.90°C	Ambient temperature ..... 35°C
Suction gas return 18.33K	

**** ARI Conditions low temperature:**

Evaporating temperature ..... -31.67°C	Liquid sub-cooling 0K
Condensing temperature ..... 40.56°C	Ambient temperature ..... 35°C
Suction gas return 18.33K	

2.3 Application range

2.3.1 Qualified refrigerants and oils

WARNING
Use of R450A and R513A refrigerants! Risk of compressor damage!
Refrigerant migration of R450A or R513A into the compressor crankcase could cause low oil viscosity, which could lead to compressor damage. When using R450A or R513A it is critical to meet the following requirements:

- maintain adequate superheat settings with a minimum superheat of 8-10K;
- no liquid refrigerant migration into the compressor at any time, especially during standstill, during or after defrost, or after reverse mode for example in heat pumps;
- pumpdown is recommended;
- the use of a crankcase heater is mandatory;
- retrofit to R450A and R513A is only allowed for compressors which are approved for these refrigerants.

Contact Application Engineering for any further information.

IMPORTANT
It is essential that the glide of refrigerant blends (primarily R407A and R407F) is carefully considered when adjusting pressure and superheat controls.

Oil recharge values can be taken from Copeland Scroll compressors brochures or Copeland™ brand products Select software at www.emersonclimate.eu.

Compressors	**ZB*KCE**	**ZB*K5E**	**ZF**
	50K, 58K, 66K, 76K, 95K, 114K	**66K, 76K, 95K, 114K**	**25K, 34K, 41K, 49K**
Qualified refrigerants	**R404A, R407A, R407F, R448A, R449A, R134a, R450A, R513A**		**R404A, R407A, R407F, R448A, R449A,**
	R22	**R407C**	
Copeland brand products standard oil	Emkarate RL 32 3MAF		
Servicing oils	Emkarate RL 32 3MAF, Mobil EAL Arctic 22 CC		

Table 1: Qualified refrigerants and oils

*2.3.2 Comparison between ZB*KCE and ZB*K5E compressors*

ZB*KC and ZB*K5 models are based on the same compressor platform, but there are slight differences. **Table 2** hereunder explains the differences and similarities between ZB*KCE and ZB*K5E models:

Equipment	**ZB*KCE compressors**	**ZB*K5E compressors**
Suction and discharge connections	Rotalock	Rotalock, raised suction fitting
Oil connections	Oil sight glass and Schraeder oil valve	
Electrical connection	Traditional (3 screws) Option = Moulded plug	Traditional (3 screws)
Terminal box protection class	IP21 (standard) IP66 (with moulded plug)	IP54 (standard)
Motor protection	Klixon internal protection	
Discharge temperature protection	ASTP	External thermostat

Table 2: Differences and similarities between ZB*KCE and ZB*K5E models

2.3.3 Application limits

CAUTION
Inadequate lubrication! Compressor breakdown! The superheat at the compressor suction inlet must always be sufficient to ensure that no refrigerant droplets enter the compressor. For a typical evaporator-expansion valve configuration a minimum stable superheat of at least 5K is required.

The application envelopes for Digital refrigeration Scroll compressors are for various refrigerants, you can find them in the Copeland brand products Select software, which can be downloaded for free on our website www.emersonclimate.eu

3 Installation

WARNING
High pressure! Injury to skin and eyes possible! Be careful when opening connections on a pressurized item.

3.1 Compressor handling

3.1.1 Transport and storage

WARNING
Risk of collapse! Personal injuries! Move compressors only with appropriate mechanical or handling equipment according to weight. Keep in the upright position. Stack pallets on top of each other when not exceeding 300 kg. Do not stack single boxes on top of each other. Keep the packaging dry at all times.

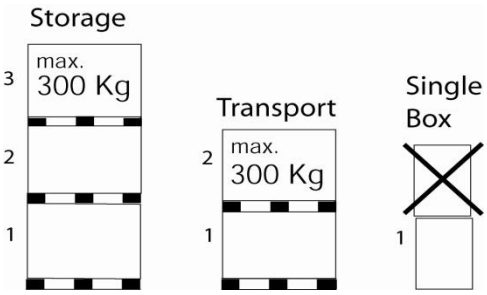

Figure 1

3.1.2 Positioning and securing

IMPORTANT
Handling damage! Compressor malfunction! Only use the lifting eyes whenever the compressor requires positioning. Using discharge or suction connections for lifting may cause damage or leaks.

For all models the suction connection plug must be left in place until the compressor is set into the unit otherwise oil might spill out of the suction connection located low on the shell. If possible, the compressor should be kept vertical during handling. The discharge connection plug should be removed first before pulling the suction connection plug to allow the dry air pressure inside the compressor to escape. Pulling the plugs in this sequence prevents oil mist from coating the suction tube making brazing difficult. The copper-coated steel suction tube should be cleaned before brazing. No object, eg, a swaging tool should be inserted deeper than 51 mm into the suction tube or it might damage the suction screen and motor.

3.1.3 Installation location

Ensure the compressors are installed on a solid level base.

3.1.4 Mounting parts

Four vibration absorber grommets are supplied with each compressor. They dampen the start-up surge of the compressor and minimise sound and vibration transmission to the compressor base during operation. The metal sleeve inside is a guide designed to hold the grommet in place. It is not designed as a load-bearing member, and application of excessive torque to the bolts can crush the sleeve. Its inner diameter is approximately 8.5 mm to fit, eg, an M8 screw. The mounting torque should be 13 ± 1 Nm. It is critically important that the grommet is not compressed.

Mounting parts ZB50K* to ZB114K* and ZF25K* to ZF49K* - Soft mountings

Figure 2

If the compressors are mounted in tandem or used in parallel, then the hard mountings (bolt M9 5/16”) are recommended. The mounting torque should be 27 ± 1 Nm. It is possible to deliver these hard mounting parts as a kit.

3.2 Brazing procedure

IMPORTANT
Blockage! Compressor breakdown! Maintain a flow of oxygen-free nitrogen through the system at very low pressure during brazing. Nitrogen displaces the air and prevents the formation of copper oxides in the system. If allowed to form, the copper oxide material can later be swept through the system and block screens such as those protecting capillary tubes, thermal expansion valves, and accumulator oil return holes.
Contamination or moisture! Bearing failure! Do not remove the plugs until the compressor is set into the unit. This minimises any entry of contaminants and moisture.

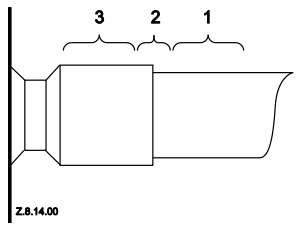

Figure 3: Suction tube brazing

Copeland Scroll compressors have copper-plated steel suction, injection and discharge tubes. These tubes are far more robust and less prone to leaks than copper tubes. Due to the different thermal properties of steel and copper, brazing procedures may have to be changed from those commonly used.

Figure 3 shows the proper procedure for brazing the suction and discharge lines to a scroll compressor.

- The copper-coated steel tubes on scroll compressors can be brazed in approximately the same manner as any copper tube.
- Recommended brazing materials: any Silfos material is recommended, preferably with a minimum of 5% silver. However, 0% silver is acceptable.
- Be sure tube fitting inner diameter and tube outer diameter are clean prior to assembly.
- Using a double-tipped torch, apply heat in area 1.
- As the tube approaches brazing temperature, move the torch flame to area 2.
- Heat area 2 until braze temperature is attained, moving the torch up and down and rotating around the tube as necessary to heat the tube evenly. Add braze material to the joint while moving the torch around the joint to flow braze material around the circumference.
- After the braze material flows around the joint, move the torch to heat area 3. This will draw the braze material down into the joint. The time spent heating area 3 should be minimal.
- As with any brazed joint, overheating may be detrimental to the final result.

To disconnect:

- Heat joint areas 2 and 3 slowly and uniformly until the braze material softens and the tube can be pulled out of the fitting.

To reconnect:

- Recommended brazing materials: Silfos with minimum 5% silver or silver braze used on other compressors. Due to the different thermal properties of steel and copper, brazing procedures may have to be changed from those commonly used.

NOTE: **Since the discharge stub contains a check valve, care must be taken not to overheat it to prevent brazing material from flowing into it.**

3.3 Shut-off valves and adaptors

CAUTION
Leaking system! System breakdown! It is strongly recommended to periodically re-torque all pipe and fixing connections to the original setting after the system has been put into operation.

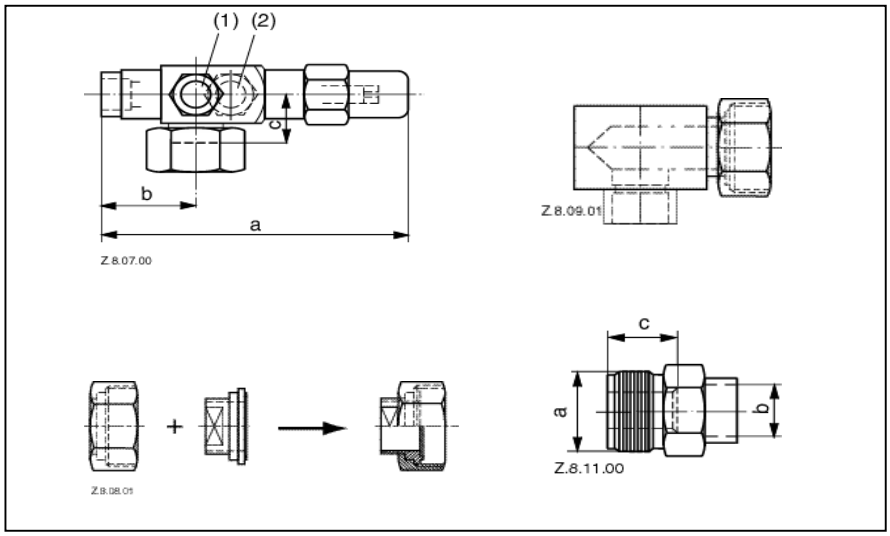

Figure 4

Copeland Scroll compressors are delivered with a discharge check valve fitted inside the discharge port and rubber plugs fitted to the suction and discharge ports as standard. There are options to fit either Rotalock valves, or Rotalock adaptors. Using either straight or angled adaptors provides a way to convert a Rotalock into a brazing connection.

Refer to **Table 4** hereunder for proper tightening torques:

	Torque [Nm]
Rotalock 1 ¼" – 12 UNF	100 – 110
Rotalock 1 ¾" – 12 UNF	170 - 180

Table 3

NOTE: **More information about adaptors and shut-off valves can be found in the "Spare parts list".**

3.4 Suction accumulators

CAUTION
Inadequate lubrication! Bearing destruction! Minimise liquid refrigerant returning to the compressor. Too much refrigerant dilutes the oil. Liquid refrigerant can wash the oil off the bearings leading to overheating and bearing failure. For R450A and R513A refrigerants Emerson Climate Technologies recommends to use suction accumulators, unless it has been qualified that an accumulator is not needed – see below.

Irrespective of system charge, oil dilution may occur if large amounts of liquid refrigerant repeatedly flood back to the compressor during:

- normal off cycles
- defrost
- varying loads

In such a case an accumulator must be used to reduce flood-back to a safe level that the compressor can handle. The use of an accumulator is dependent on the application. If an accumulator must be used, the oil-return orifice should be 2.0 mm in diameter for all models.

The size of the accumulator depends upon the operating range of the system and the amount of sub-cooling and subsequent head pressure allowed by the refrigerant control.

3.5 Screens

CAUTION
Screen blocking! Compressor breakdown! Use screens with at least 0.6 mm openings.

The use of screens finer than 30 x 30 mesh (0.6 mm openings) anywhere in the system should be avoided with these compressors. Field experience has shown that finer mesh screens used to protect thermal expansion valves, capillary tubes or accumulators can become temporarily or permanently plugged with normal system debris and block the flow of either oil or refrigerant to the compressor. Such blockage can result in compressor failure.

3.6 Mufflers

External mufflers, normally applied to piston compressors in the past, may not be required for Copeland Scroll compressors. Individual system tests should be performed to verify the acceptability of the sound performance. If adequate attenuation is not achieved, use a muffler with a larger cross-sectional area to inlet area ratio. A ratio of 20:1 to 30:1 is recommended. A hollow shell muffler will work quite well. Locate the muffler at minimum 15 to maximum 45 cm from the compressor for the most effective operation. The further the muffler is placed from the compressor within these ranges, the more effective. Choose a muffler with a 10 – 15 cm length x 4 cm depth.

3.7 Suction line noise and vibration

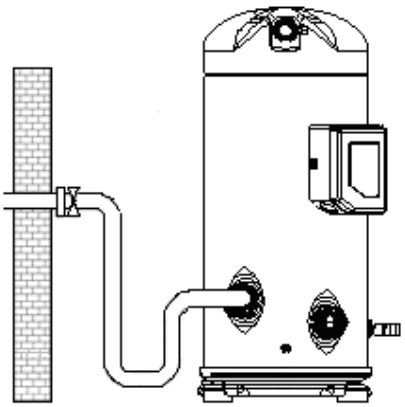

Figure 5: Suction tube design

Copeland Scroll compressors inherently have low sound and vibration characteristics. However in some respects the sound and vibration characteristics differ from reciprocating compressors and in rare instances could result in unexpected sound generation. One difference is that the vibration characteristic of the scroll compressor, although low, includes two very close frequencies, one of which is normally isolated from the shell by the suspension of an internally-suspended compressor. These frequencies, which are present in all compressors, may result in a low-level "beat" frequency that can be detected as noise coming along the suction line into the building under some conditions. Elimination of the beat can be achieved by attenuating either of the contributing frequencies. This is easily done by using one of the common combinations of recommended design configurations. The scroll compressor makes both a rocking and twisting motion and enough flexibility must be provided in the line to prevent vibration transmission into any lines attached to the unit. In a split system, the most important goal is to ensure minimal vibration in all directions at the service valve to avoid transmitting vibrations to the structure to which the lines are fastened.

A second difference of the Copeland Scroll is that under some conditions the normal rotational starting motion of the compressor can transmit an "impact" noise along the suction line. This may be particularly pronounced in three-phase models due to their inherently higher starting torque. This phenomenon, like the one described previously, also results from the lack of internal suspension and can be easily avoided by using standard suction line isolation techniques as described below.

Recommended configuration

- Tubing configuration: .....small shock loop
- Service valve: ....."angled" valve fastened to unit / wall
- Suction muffler: .....not required

Alternative configuration

- Tubing configuration: .....small shock loop
- Service valve:....."straight through" valve fastened to unit / wall
- Suction muffler: .....may be required (acts as dampening mass)

4 Scroll compressors ZF*K5E for low temperature applications

ZF*K5E compressors are designed and applicable for both liquid injection and vapour injection (EVI).

For low temperature applications of ZF*K5E models, liquid or vapour injection is required to keep discharge gas temperatures within safe limits. The documented application limits (see Chapter 2.3.3 or the technical data in Selection software) are based on the ZF* scroll compressors equipped with liquid injection or vapour injection.

Injection takes place into two distinct pockets of the spirals without affecting the suction process. Both types of injection slightly increase the mass flow through the condenser.

All ZF*K5E scroll compressor types are equipped with a 1” – 14 UNS 2A diameter injection port.

4.1 ZF*K5E compressors with liquid injection

Liquid injection is achieved by means of a Discharge Temperature Control (DTC) valve. The same DTC valve can be used for all ZF*K5E compressors and approved refrigerants. The purpose of the DTC valve is to eliminate the need for a standard capillary tube.

ZF compressors (BOM 567) include a well in the top cap combined with a valve cap. The DTC valve is equipped with a custom bulb profile, which must be installed in the top well of the compressor sensing the temperature closest to the discharge port. The bulb/bellows combination injects only when cooling is needed and in the required amounts. The DTC valve connections are 1” Rotalock for the compressor injection port and 3/8" braze for the connection to the liquid line.

To prevent a partial or full blockage at the injection port caused by shavings, foreign bodies etc a filter should be installed in the liquid line prior to the DTC valve inlet.

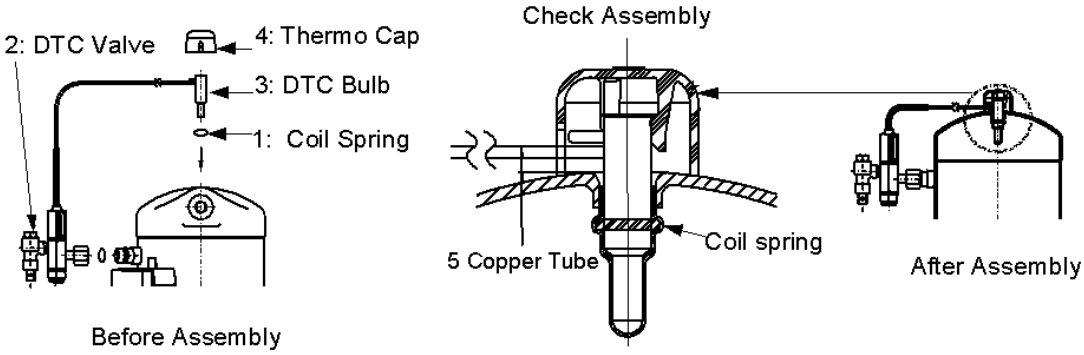

Figure 6: DTC valve assembly

4.1.1 DTC valve specifications

Opening set point: 121°C ± 3K

Liquid line connection: 3/8”

4.1.2 Valve installation

The valve bulb must be installed in the top cap to adequately control scroll temperatures. The DTC valve should be tightened on the injection fitting to a torque of 24-27 Nm. It is recommended that the valve be located perpendicular to the compressor orientation. However it will function properly in any orientation. The capillary tube connecting the valve to the bulb should be positioned at least 13 mm away from the side of the scroll to avoid contact during operation.

The DTC valve is supplied with a teflon gasket for the injection port connection and an insulating cap which is applied to the top of the compressor.

For most efficient thermal sensing, a thin film of thermal grease could be spread around the DTC valve bulb before installing into the top cap well. However for proper functioning of the valve this is not required.

If the additional height from the insulating cap is an issue, the valve cap could be replaced with high temperature insulation. This should be applied to insulate and protect the valve remote bulb assembly. This will reduce the total height requirement by 12.7 mm.

4.1.3 Compressor or valve service

When replacing a ZF compressor using the DTC valve it is recommended to replace both the DTC valve and the compressor at the same time. The filter in the liquid line should also be replaced.

4.2 ZF*K5E compressors with vapour injection

4.2.1 Economized Vapour Injection technology (EVI)

The refrigeration Economized Vapour Injection (EVI) technology has been developed to provide improved capacity and efficiency.

Scroll compressor models ZF*K5E-TFD are equipped with a 1” - 14 UNS 2A injection connection, which could also be used as a vapour injection connection for economizer operation. Economizing can be accomplished by using a sub-cooling circuit similar to the circuit shown in **Figure 7**. The line diagram shows a system configuration for the economizer cycle. A heat exchanger is used to provide additional sub-cooling to the refrigerant before it enters the evaporator. This sub-cooling process provides the increased capacity gain measured in the system. The refrigerant evaporated through the heat exchanger is injected into the compressor and provides additional cooling at higher compression ratios.

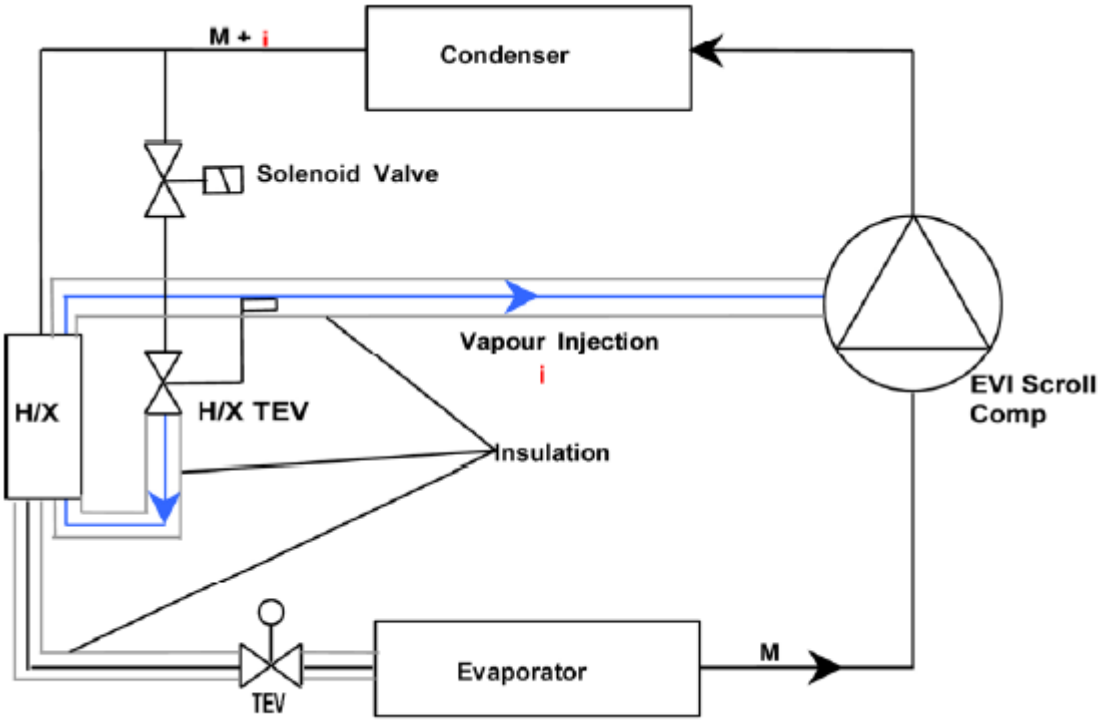

Figure 7: Vapour injection line diagram

During the sub-cooling process a small amount of refrigerant is evaporated and superheated. This superheated refrigerant is then injected into the mid-compression cycle of the scroll compressor and compressed to discharge pressure. This injected vapour also provides cooling at higher compression ratios, similar to liquid injection of standard ZF* scroll compressors. The benefits provided will increase as the compression ratio increases, thus, more gains will be made in summer when increased capacity may actually be required.

Best sub-cooling effect is assured if counter flow of gas and liquid is provided. In order to guarantee optimum heat transfer, the plate heat exchanger should be mounted vertically and vapour should exit at the top.

4.2.2 Multiple compressor applications

Multiple EVI compressors can be used with either a single heat exchanger for each compressor or a common heat exchanger for all compressors. In case of a common heat exchanger, a solenoid valve should be installed on each individual vapour injection line.

Special care has to be given to the design of the heat exchanger and of the thermostatic expansion valve (TXV) to allow for part-load operation. Good refrigerant distribution is required in the common heat exchanger as well as sufficient velocities for oil return, even at part load.

In the case of a large range of capacity modulation (more than 2 compressors in parallel), the use of an electronic expansion valve (EXV) or of two different TXV(s) controlled by individual solenoid valves, may be necessary. It is necessary to ensure that the solenoid valves, vapour injection lines and header(s) are adequately sized in order to keep pressure drop to a minimum. At the same time, the layout should be such that excessive amounts of oil do not accumulate in the header.

***NOTE:* For further information on vapour injection please refer to Technical Information C7.19.1 "Vapour Injection Scroll Compressors for Refrigeration".**

4.3 ZF*K5E compressors with wet vapour injection

When using scroll compressors in low temperature applications with R407A, R407F and R448A, R449A and an extended envelope (see Chapter 2.3.3 Application limits), additional liquid injection with a DTC valve is required in conjunction with the vapour injection to protect the scroll from higher discharge temperatures. A dedicated discharge gas thermostat must be installed on the discharge line.

Compressor models ZF25K5E to ZF49K5E can be used with R407A, R407F, R448A, R449A and vapour injection + liquid injection.

The wet injection cycle showing the main components is shown in **Figure 8**.

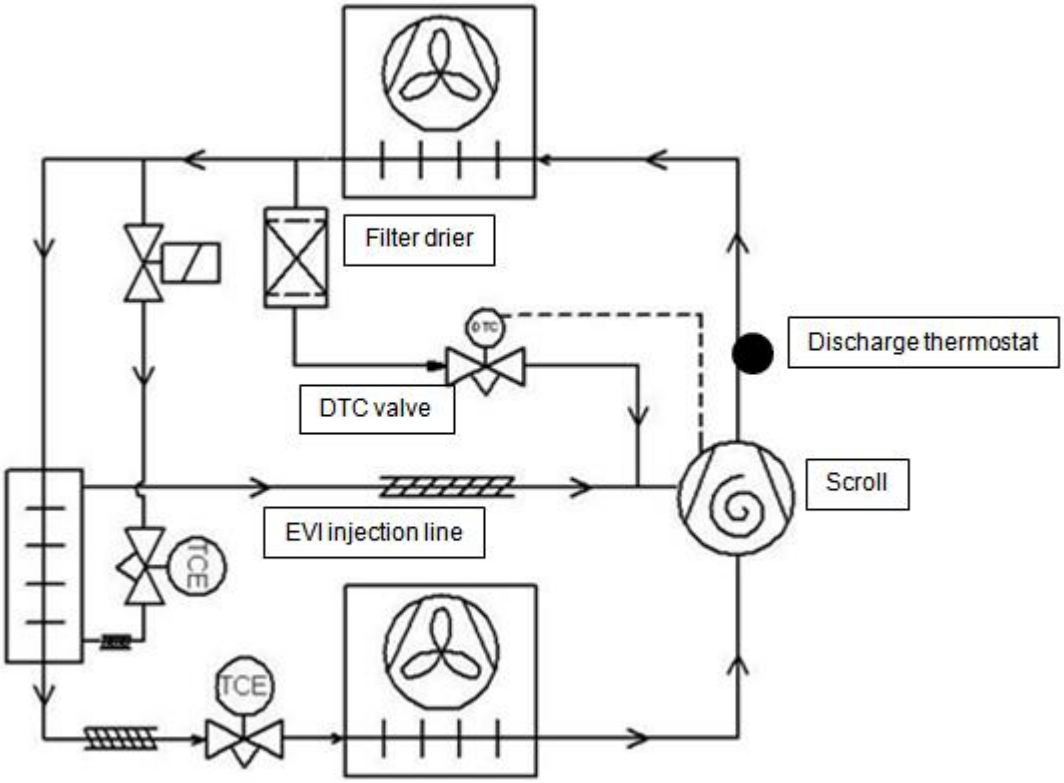

Figure 8: Vapour + liquid injection for low temp applications

***NOTE:* For further information on wet vapour injection please refer to Technical Information C7.19.2 "Refrigeration Scroll Compressors using R407A, R407F, R448A or R449A in Low Temperature Applications".**

5 Electrical connection

5.1 General recommendations

The compressor terminal box has a wiring diagram on the inside of its cover. Before connecting the compressor, ensure the supply voltage, the phases and the frequency match the nameplate data.

5.2 Electrical installation

Three-phase compressors (TF*) with internal motor protection:

Power circuit **Control circuit**

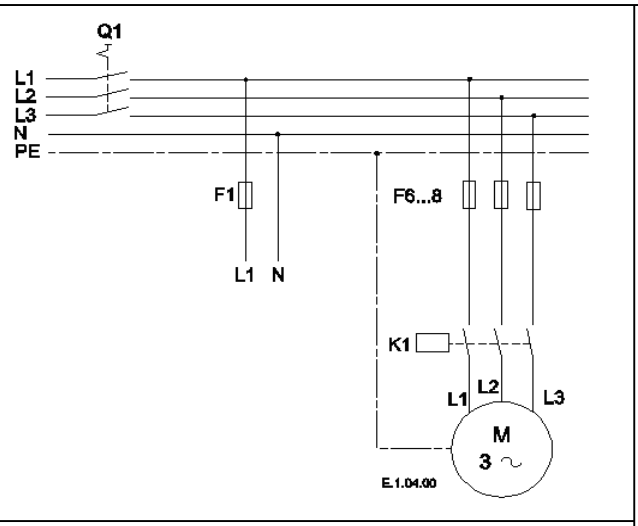

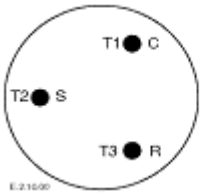

Motor terminal connections

Three-phase compressors are connected to theT1, T2 and T3 connections

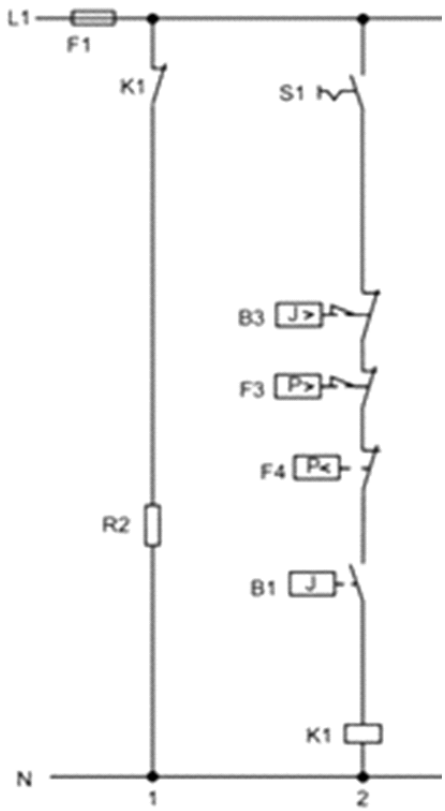

Legend

B1 ..... Room thermostat
B3 ..... Discharge gas thermostat
F1 ..... Fuse
F3 ..... HP switch
F4 ..... LP switch
K1 .....Contactor
R2.....Crankcase heater
S1 .....Auxiliary switch

Figure 9

5.3 Terminal box

The protection class for the terminal box is IP21 for all ZB50KCE to ZB114KCE compressors BOM 551 version, and IP54 for all ZB*K5E and ZF*K5E models, according to IEC 60034-5.

Cable glands have an influence on the protection class of the terminal box. It is strongly recommended to use appropriate cable glands in order to reach the rated protection class. We advise installers/service providers to pay attention to this aspect every time they install or replace a Copeland Scroll compressor and to use cable glands according to EN 50262 or any other relevant standard of application in their country/region. Examples of correct electrical installations are shown in **Figures 10 & 11**.

Figure 10: Correct electrical installation with cable glands for IP21 T-box

Figure 11: Correct electrical installation with cable glands for IP54 T-box

A moulded plug version is available as an option for compressor models ZB50KCE-TFD to ZB114KCE-TFD. It is compliant with all CE and safety regulations and its protection class is IP66.

The ZB compressor BOM 651 version is dedicated to the moulded plug and its benefits which include ease of installation, reduced assembly time and consequent reduced customer's applied costs. Several conductor cable diameters and lengths are available.

5.3.1 Motor windings

The compressor models covered in these guidelines are offered with a three-phase induction motor. All three-phase motors are connected in star.

The motor insulation material is class "B" (**TF***) for all these compressor models. This is according to VDE 0530, IEC 34-1 or DIN 57530.

5.3.2 Protection devices

Independently from the internal motor protection, fuses must be installed before the compressor. The selection of fuses has to be carried out according to VDE 0635, DIN 57635, IEC 269-1or EN 60-269-1.

5.3.3 Crankcase heaters

IMPORTANT
Oil dilution! Bearing malfunction! Turn the crankcase heater on 12 hours before starting the compressor.

A crankcase heater is used to prevent refrigerant migrating into the shell during standstill periods. Due to the Copeland Scroll's inherent ability to handle liquid refrigerant in flooded conditions a crankcase heater is not required as long as the system charge does not exceed 7.5kg.

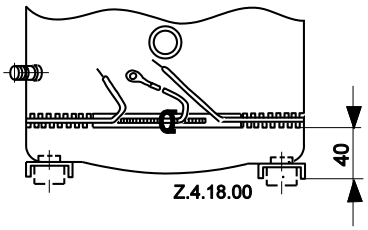

Figure 12: Crankcase heater location

If a crankcase heater is fitted it is recommended that the heater be turned on for a **minimum of 12 hours** prior to starting the compressor. This will prevent oil dilution and bearing stress on initial start-up. The crankcase heater must remain energised during compressor off cycles.

The crankcase heater must be mounted below the oil schraeder valve located on the bottom shell, see **Figure 12**.

5.4 Pressure safety controls

5.4.1 High pressure control

The cut-out setting for the high-pressure control should be determined according to regional standards, in Europe usually EN 378, part 2.

The maximum pressure value for the individual compressor type, PS high side, is printed on the nameplate of the compressor.

The high-pressure control should have a manual reset feature for the highest level of system protection.

5.4.2 Low pressure control

The minimum cut-out setting should be selected according to the refrigerant and to the allowed operation envelope (see technical data in Select software). For example, a minimum cut-out setting of 0.3 bar(g) is required for the ZF compressor using R404A.

The low-pressure cut-out should have a manual reset feature for the highest level of system protection.

5.5 Discharge temperature protection

5.5.1 ASTP Advanced Scroll Temperature Protection

Scroll compressor models ZB50KCE to ZB114KCE have the addition of the Advanced Scroll Temperature Protection (ASTP). The Advanced Scroll Temperature Protection is also a temperature sensitive thermo-disc that acts to protect the compressor from discharge gas overheating. Once the discharge gas reaches a critical temperature, the ASTP feature will cause the scrolls to separate and stop pumping although the motor continues to run. After running for some time without pumping gas, the motor protector will open.

Figure 13: Advanced Scroll Temperature Protection (ASTP)

ASTP was developed to protect the compressor, not for envelope control. Applications where compressors are used in the upper left corner of the operation envelope may lead to undesired downtime and cut-offs for safety. Therefore the envelope needs to be controlled properly. For such applications, it is strongly advised to install an additional external discharge thermostat.

To identify compressors with Advanced Scroll Temperature Protection, a label has been added above the terminal box.

***NOTE:* Depending upon the heat build-up in the compressor, it may take up to two hours for the ASTP and motor protector to reset!**

5.5.2 Discharge line thermostat

The use of an external discharge thermostat is required for all ZF*K5E and ZB*K5E compressors and a discharge thermostat is included in the standard delivery of all these models.

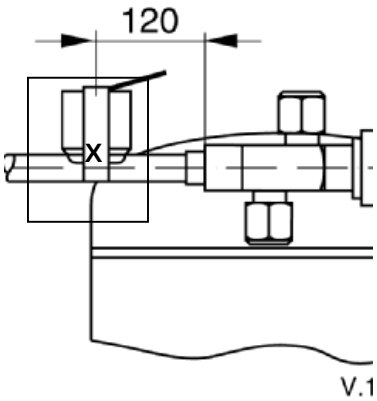

Figure 14: Discharge temperature protection recommended position

Internal discharge temperatures can reach unacceptable values under some extreme operating conditions (such as loss of refrigerant injection charge or extremely high compression ratio). This could cause compressor damage.

The ZF*K5E and ZB*K5E dedicated discharge thermostat has a cut-out setting of 130°C ± 4K with closing at 101°C ± 8K and should be installed approximately 120 mm from the discharge valve outlet (see **Figure 14**). In order to avoid improper functioning due to false readings this thermostat needs to be insulated (see “X” in **Figure 14**).

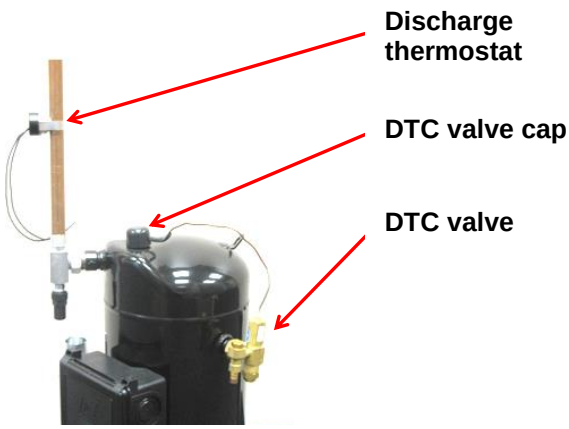

Figure 15: Example of ZF*K5E-TFD installation, liquid injection with DTC valve and discharge thermostat on the discharge line

5.6 Motor protection

For the ZB50KCE to ZB114KCE, ZB66K5E to ZB114K5E and ZF25K5E to ZF49K5E ranges of compressors, conventional inherent internal line break motor protection is provided.

5.7 High-potential testing

WARNING
Conductor cables! Electrical shock! Shut off power supply before high-potential testing.

CAUTION
Internal arcing! Motor destruction! Do not carry out high-voltage or insulation tests if the compressor housing is under vacuum.

Emerson Climate Technologies subjects all Scroll compressors to a high-voltage test after final assembly. Each motor phase winding is tested, according to EN 0530 or VDE 0530 part 1, at a differential voltage of 1000V plus twice the nominal voltage. Since high-voltage tests lead to premature ageing of the winding insulation further additional tests of that nature are not recommended.

If it has to be done for any reason, a lower voltage must be used. Disconnect all electronic devices, eg, motor protection module, fan speed control, etc prior to testing.

6 Starting up & operation

WARNING
Diesel effect! System explosion! The mixture of air and oil at high temperature can lead to an explosion. Avoid operating with air.

IMPORTANT
Oil dilution! Bearing malfunction! Turn the crankcase heater on 12 hours before starting the compressor.

6.1 Strength pressure test

The compressor has been strength-tested in the factory. It is not necessary for the customer to strength- or leak-test the compressor again although the compressor will normally be exposed to the testing made as part of system testing.

6.2 Tightness/pressure test

WARNING
High pressure! Personal injuries! Consider personal safety requirements and refer to test pressures prior to test.

WARNING
System explosion! Personal injuries! DO NOT USE other industrial gases.

CAUTION
System contamination! Bearing malfunction! Use only dry nitrogen or dried air for pressure testing.

If using dry air do not include the compressor in the pressure test – isolate it first. Never add refrigerant to the test gas (as leak indicator).

6.3 System evacuation

Before the installation is put into commission, it has to be evacuated with a vacuum pump. Proper evacuation reduces residual moisture to 50 ppm. During the initial procedure, suction and discharge shut-off valves on the compressor remain closed. The installation of adequately sized access valves at the furthest point from the compressor in the suction and liquid lines is advisable. Pressure must be measured using a vacuum pressure (Torr) gauge on the access valves and not on the vacuum pump; this serves to avoid incorrect measurements resulting from the pressure gradient along the connecting lines to the pump.

Evacuating the system only on the suction side of a Scroll compressor can occasionally result in a temporary no-start condition for the compressor. The reason for this is that the floating seal could axially seal with the scroll set, with the higher pressure on the floating seal. Consequently, until the pressures equalise, the floating seal and scroll set can be held tightly together. The installation should be evacuated down to 0.3 mbar / 0.22 Torr.

Subsequently, the factory holding charge of dry air in the compressor is released to the ambient. The shut-off valves are opened and the installation - including the compressor - is once more evacuated as described after the system has been recharged with dry nitrogen. The highest demands are placed on the leak-proof design of the installation and on leak testing methods (please refer to EN 378).

6.4 Preliminary checks – Pre-starting

Discuss details of the installation with the installer. If possible, obtain drawings, wiring diagrams, etc. It is ideal to use a check-list but always check the following:

- Visual check of the electrics, wiring, fuses etc
- Visual check of the plant for leaks, loose fittings such as TXV bulbs etc
- Compressor oil level
- Calibration of HP & LP switches and any pressure actuated valves
- Check setting and operation of all safety features and protection devices

- All valves in the correct running position
- Pressure and compound gauges fitted
- Correctly charged with refrigerant
- Compressor electrical isolator location & position

6.5 Charging procedure

CAUTION
Low suction pressure operation! Compressor Damage! Do not operate with a restricted suction. Do not operate with the low-pressure cut-out bridged. Do not operate compressor without enough system charge to maintain at least 0.3 bar suction pressure. Allowing pressure to drop below 0.3 bar for more than a few seconds may overheat scrolls and cause early drive bearing damage.

The system should be liquid-charged through the liquid-receiver shut-off valve or through a valve in the liquid line. The use of a filter drier in the charging line is highly recommended. Because scrolls have discharge check valves, systems should be liquid-charged on both the high and low sides simultaneously to ensure a positive refrigerant pressure is present in the compressor before it runs. The majority of the charge should be placed in the high side of the system to prevent bearing washout during first-time start on the assembly line.

6.6 Refrigerant retrofit from HFC to HFO/HFC blends

Beside the standard retrofitting procedures on HFC systems, when retrofitting to HFO/HFC blends, like for example R450A, R513A, it is critical to fulfil the following conditions:

- maintain adequate superheat settings
- no liquid refrigerant migration into the compressor at all times, especially during standstill, during or after defrost, or after reverse mode for example in heat pumps.

Contact Application Engineering for any further information.

6.7 Initial start-up

CAUTION
Oil dilution! Bearing malfunction! It is important to ensure that new compressors are not subjected to liquid abuse. Turn the crankcase heater on 12 hours before starting the compressor.

CAUTION
High discharge pressure operation! Compressor damage! Do not use compressor to test opening set point of high-pressure cut-out. Bearings are susceptible to damage before they have had several hours of normal running in.

Liquid and high pressure loads could be detrimental to new bearings. It is therefore important to ensure that new compressors are not subjected to liquid abuse and high-pressure run tests. It is not good practice to use the compressor to test the high-pressure switch function on the production line. Switch function can be tested with nitrogen prior to installation and wiring can be checked by disconnecting the high-pressure switch during the run test.

6.8 Rotation direction

Scroll compressors, like several other types of compressors, will only compress in one rotational direction. Direction of rotation is not an issue with single-phase compressors since they will always start and run in the proper direction. Three-phase compressors will rotate in either direction depending upon phasing of the power. Since there is a 50-50 chance of connecting power in such a way as to cause rotation in the reverse direction, **it is important to include notices and instructions in appropriate locations on the equipment to ensure proper rotation direction when the system is installed and operated.**

Observing that suction pressure drops and discharge pressure rises when the compressor is energized allows verification of proper rotation direction. There is no negative impact on

durability caused by operating three-phase Copeland Scroll compressors in the reversed direction for a short period of time (under one hour) but oil may be lost. Oil loss can be prevented during reverse rotation if the tubing is routed at least 15 cm above the compressor. After several minutes of operation in reverse, the compressor protection system will trip due to high motor temperature. The operator will notice a lack of cooling or heating. However, if allowed to repeatedly restart and run in reverse without correcting the situation, the compressor will be permanently damaged.

All three-phase scroll compressors are identically wired internally. Therefore, once the correct phasing is determined for a specific system or installation, connecting properly phased power leads to the identified compressor terminals will ensure proper rotation direction.

6.9 Starting sound

During the very brief start-up, a clicking sound is audible, resulting from initial contacting of the spirals and is normal. No start assist devices are required for single-phase compressors, even if a system uses non-bleed expansion valves. Due to the design of the Copeland scroll, the internal compression components always start unloaded even if system pressures are not balanced. In addition, since internal compressor pressures are always balanced at start-up, low-voltage starting characteristics are excellent for Copeland Scroll compressors. Moreover, if low voltage conditions exist at start up, protector trips could result.

6.10 Deep vacuum operation

CAUTION
Vacuum operation! Compressor damage! Copeland Scroll compressors should never be used to evacuate refrigeration or air-conditioning systems.

The scroll compressor can be used to pump down refrigerant in a unit as long as the pressures remain within the operating envelope. Low suction pressures will result in overheating of the scrolls and permanent damage to the compressor drive bearing or will cause the ASTP to activate. Copeland Scroll compressors incorporate internal low vacuum protection; the floating seal unloads when the pressure ratio exceeds approximately 10:1 for ZB* and 20:1 for ZF* compressors.

6.11 Shell temperature

The top shell and discharge line can briefly but repeatedly reach temperatures above 177°C if the compressor cycles on its internal protection devices. This only happens under rare circumstances and can be caused by the failure of system components such as the condenser or evaporator fan or loss of charge and depends upon the type of expansion control. Care must be taken to ensure that wiring or other materials that could be damaged by these temperatures do not come in contact with the shell.

6.12 Pump-down cycle

To control refrigerant migration a pump-down system should be used. The discharge check valve with a refrigeration scroll compressor is designed for low leak back and will allow the use of a pump-down without the addition of an external check valve.

If the compressor is stationary for prolonged periods, refrigerant could migrate into the compressor and therefore a crankcase heater must be installed.

If cold air is constantly drawn over the compressor this could make the crankcase heater ineffective and therefore a pump-down system is recommended.

For ZB models care should be taken because the scroll sets will unload at a pressure ratio of approximately 10:1. If the unit fails to pump down, the pump-down pressure should be reset to a higher value. The low-pressure control differential for all models needs to be reviewed since a relatively lower volume of gas will reexpand from the discharge plenum of the compressor into the low side on shutdown.

6.13 Minimum run time

Emerson Climate Technologies recommends a maximum of 10 starts per hour. There is no minimum off time because Scroll compressors start unloaded even if the system has unbalanced

pressures. The most critical consideration is the minimum run time required to return oil to the compressor after start-up. To establish the minimum run time obtain a sample compressor equipped with a sight tube (available from Emerson Climate Technologies) and install it in a system with the longest connecting lines that are approved for the system. The minimum on time becomes the time required for oil lost during compressor start-up to return to the compressor sump and restore a minimal oil level that will ensure oil pick-up through the crankshaft. Cycling the compressor for a shorter period than this, for instance to maintain very tight temperature control, will result in progressive loss of oil and damage to the compressor.

6.14 Shut-off sound

Scroll compressors incorporate a device that minimizes reverse rotation. The residual momentary reversal of the scrolls at shut-off will cause a clicking sound, but it is entirely normal and has no effect on compressor durability.

6.15 Frequency

There is no general release of standard Copeland Scroll compressors for use with variable speed AC drives. There are numerous issues that must be considered when applying Scroll compressors with variable speed, including system design, inverter selection, and operating envelopes at various conditions. Only frequencies from 50 Hz to 60 Hz are acceptable. Operation outside this frequency range is possible but should not be done without specific Application Engineering review. The voltage must vary proportionally to the frequency.

If the inverter can only deliver a maximum voltage of 400V, the amps will increase when the speed is above 50 Hz, and this may give rise to nuisance tripping if operation is near the maximum power limit and/or compressor discharge temperature limit.

6.16 Oil level

The oil level should be maintained at mid-point of the sight glass. If an oil regulator is being used the level should be set within the top half of the sight glass.

7 Maintenance & repair

7.1 Exchanging the refrigerant

Qualified refrigerants and oils are given in section 2.3.1.

It is not necessary to replace the refrigerant with new unless contamination due to an error such as topping up the system with an incorrect refrigerant is suspected. To verify correct refrigerant composition, a sample can be taken for chemical analysis. A check can be made during shut down by comparing the refrigerant temperature and pressure using precision measurements at a location in the system where liquid and vapour phases are present and when the temperatures have stabilised.

In the event that the refrigerant needs replacing, the charge should be recovered using a suitable recovery unit.

7.2 Rotalock valves

Rotalock valves should be periodically re-torqued to ensure that leak prevention tightness is maintained.

7.3 Replacing a compressor

CAUTION
Inadequate lubrication! Bearing destruction! Exchange the accumulator after replacing a compressor with a burned out motor. The accumulator oil return orifice or screen may be plugged with debris or may become plugged. This will result in starvation of oil to the new compressor and a second failure.

7.3.1 Compressor replacement

In the case of a motor burnout, the majority of contaminated oil will be removed with the compressor. The rest of the oil is cleaned through the use of suction and liquid line filter driers. A 100% activated alumina suction line filter drier is recommended but must be removed after 72 hours. **It is highly recommended that the suction accumulator be replaced if the system contains one.** This is because the accumulator oil return orifice or screen may be plugged with debris or may become plugged shortly after a compressor failure. This will result in starvation of oil to the replacement compressor and a second failure. When a single compressor or tandem is exchanged in the field, it is possible that a major portion of the oil may still be in the system. While this may not affect the reliability of the replacement compressor, the extra oil will add to rotor drag and increase power usage.

7.3.2 Start-up of a new or replacement compressor

Rapid charging only on the suction side of a scroll-equipped system or condensing unit can occasionally result in a temporary no start condition for the compressor. The reason for this is that, if the flanks of the compressor happen to be in a sealed position, rapid pressurisation of the low side without opposing high-side pressure can cause the scrolls to seal axially. As a result, until the pressures eventually equalise, the scrolls can be held tightly together preventing rotation. The best way to avoid this situation is to charge on both the high and low sides simultaneously at a rate which does not result in axial loading of the scrolls.

A minimum suction pressure of 1.75 bar must be maintained during charging. Allowing pressure to drop below 0.3 bar for more than a few seconds may overheat scrolls and cause early drive bearing damage. Never install a system in the field and leave it unattended when it has no charge, a holding charge, or with the service valves closed without securely electrically locking out the system. This will prevent unauthorised personnel from accidentally operating the system and potentially ruining the compressor by operating with no refrigerant flow. **Do not start the compressor while the system is in a deep vacuum.** Internal arcing may occur when a Scroll compressor is started in a vacuum causing burnout of the internal lead connections.

7.4 Lubrication and oil removal

CAUTION
Chemical reaction! Compressor destruction! Do not mix up ester oils with mineral oil and/or alkyl benzene when used with cholorine-free (HFC) refrigerants.

The compressor is supplied with an initial oil charge. The standard oil charge for use with refrigerants R404A, R407A, R407F, R448A, R449A, R134a R450A, and R513A and R22 is a polyolester (POE) lubricant Emkarate RL 32 3MAF. In the field the oil level could be topped up with Mobil EAL Arctic 22 CC if 3MAF is not available. See nameplate for original oil charge shown in litres. A field recharge is from 0.05 to 0.1litre less.

One disadvantage of POE is that it is far more hygroscopic than mineral oil (see **Figure 16**). Only brief exposure to ambient air is needed for POE to absorb sufficient moisture to make it unacceptable for use in a refrigeration system. Since POE holds moisture more readily than mineral oil it is more difficult to remove it through the use of vacuum. Compressors supplied by Emerson Climate Technologies contain oil with low moisture content, and it may rise during the system assembling process. Therefore it is recommended that a properly sized filter-drier is installed in all POE systems. This will maintain the moisture level in the oil to less than 50 ppm. If oil is charged into a system, it is recommended to use POE with moisture content no higher than 50 ppm.

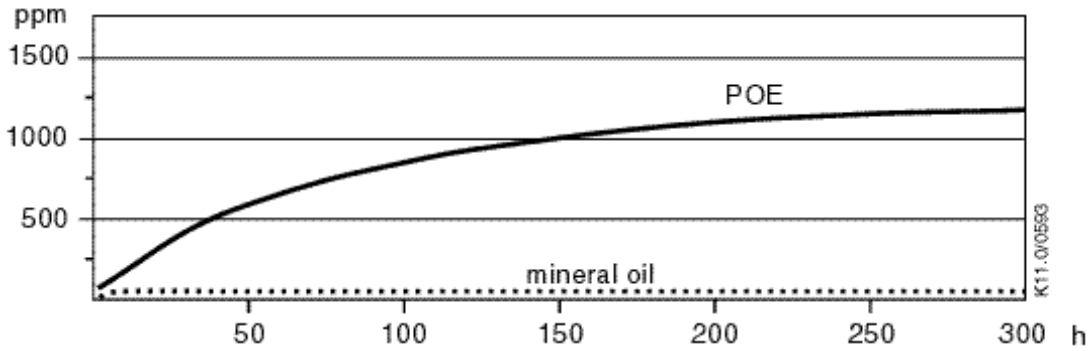

Figure 16: Absorption of moisture in ester oil in comparison to mineral oil in ppm by weight at 25° C and 50% relative humidity (h=hours)

If the moisture content of the oil in a refrigeration system reaches unacceptably high levels, corrosion and copper plating may occur. The system should be evacuated down to 0.3 mbar or lower. If there is uncertainty as to the moisture content in the system, an oil sample should be taken and tested for moisture. Sight glass/moisture indicators currently available can be used with the HFC refrigerants and lubricants; however, the moisture indicator will just show the moisture content of the refrigerant. The actual moisture level of POE would be higher than the sight glass indicates. This is due to the high hygroscopicity of the POE oil. To determine the actual moisture content of the lubricant, samples have to be taken from the system and analysed.

7.5 Oil additives

Although Emerson Climate Technologies cannot comment on any specific product, from our own testing and past experience, we do not recommend the use of any additives to reduce compressor bearing losses or for any other purpose. Furthermore, the long term chemical stability of any additive in the presence of refrigerant, low and high temperatures, and materials commonly found in refrigeration systems is complex and difficult to evaluate without rigorously controlled chemical laboratory testing. The use of additives without adequate testing may result in malfunction or premature failure of components in the system and, in specific cases, in voiding the warranty on the component.

7.6 Unbrazing system components

WARNING
Explosive flame! Burning! Oil-refrigerant mixtures are highly flammable. Remove all refrigerant before opening the system. Avoid working with an unshielded flame in a refrigerant charged system.

Before opening up a system it is important to remove all refrigerant from both the high and low sides of the system. If the refrigerant charge is removed from a scroll equipped unit from the high side only, it is possible for the scrolls to seal, preventing pressure equalization through the compressor. This may leave the low side shell and suction line tubing pressurized. If a brazing torch is then applied to the low side while the low side shell and suction line contain pressure, the pressurized refrigerant and oil mixture could ignite when it escapes and contacts the brazing flame. To prevent this occurrence, it is important to check both the high and low sides with manifold gauges before unbrazing. Instructions should be provided in appropriate product literature and assembly (line repair) areas. If compressor removal is required, the compressor should be cut out of system rather than unbrazed.

8 Dismantling & disposal

Removing oil and refrigerant:
Do not disperse in the environment.
Use the correct equipment and method of removal.
Dispose of oil and refrigerant properly.
Dispose of compressor properly.

DISCLAIMER

1. The contents of this publication are presented for informational purposes only and are not to be construed as warranties or guarantees, express or implied, regarding the products or services described herein or their use or applicability.
2. Emerson Climate Technologies GmbH and/or its affiliates (collectively "Emerson"), as applicable, reserve the right to modify the design or specifications of such products at any time without notice.
3. Emerson does not assume responsibility for the selection, use or maintenance of any product. Responsibility for proper selection, use and maintenance of any Emerson product remains solely with the purchaser or end user.
4. Emerson does not assume responsibility for possible typographic errors contained in this publication.

BENELUX
Josephinastraat 19
NL-6462 EL Kerkrade
Tel. +31 77 324 02 34
Fax +31 77 324 02 35
benelux.sales@emerson.com

UK & IRELAND
Unit 17, Theale Lakes Business Park
Reading, Berkshire RG7 4GB
Tel: +44 1189 83 80 00
Fax: +44 1189 83 80 01
uk.sales@emerson.com

BALKAN
Selska cesta 93
HR-10 000 Zagreb
Tel. +385 1 560 38 75
Fax +385 1 560 38 79
balkan.sales@emerson.com

GERMANY, AUSTRIA & SWITZERLAND
Senefelder Str. 3
DE-63477 Maintal
Tel. +49 6109 605 90
Fax +49 6109 60 59 40
ECTGermany.sales@emerson.com

SWEDEN, DENMARK, NORWAY & FINLAND
Norra Koxåsvägen 7
SW-443 38 Lerum
Tel. +46 725 386486

nordic.sales@emerson.com

ROMANIA

Tel. +40 374 13 23 50
Fax +40 374 13 28 11
Ancuta.Ionescu@Emerson.com

FRANCE, GREECE & MAGHREB
8, Allée du Moulin Berger
FR-69134 Ecully Cédex
Tel. +33 4 78 66 85 70
Fax +33 4 78 66 85 71
mediterranean.sales@emerson.com

EASTERN EUROPE & TURKEY
Pascalstr. 65
DE-52076 Aachen
Tel. +49 2408 929 0
Fax +49 2408 929 525
easterneurope.sales@emerson.com

ASIA PACIFIC
Suite 2503-8, 25/F, Exchange Tower
33 Wang Chiu Road, Kowloon Bay
Kowloon, Hong Kong
Tel. +852 2866 3108
Fax +852 2520 6227

ITALY
Via Ramazzotti, 26
IT-21047 Saronno (VA)
Tel. +39 02 96 17 81
Fax +39 02 96 17 88 88
italy.sales@emerson.com

POLAND
Szturmowa 2
PL-02678 Warsaw
Tel. +48 22 458 92 05
Fax +48 22 458 92 55
poland.sales@emerson.com

MIDDLE EAST & AFRICA
PO Box 26382
Jebel Ali Free Zone - South, Dubai - UAE
Tel. +971 4 811 81 00
Fax +971 4 886 54 65
mea.sales@emerson.com

SPAIN & PORTUGAL
C/ Pujades, 51-55 Box 53
ES-08005 Barcelona
Tel. +34 93 412 37 52
Fax +34 93 412 42 15
iberica.sales@emerson.com

RUSSIA & CIS
Emerson LLC
Dubininskaya str. 53, build. 5, 4th floor
115054 Moscow, Russia
Phone: +7 (495) 995 95 59
Fax: +7 (495) 424 88 50

C6.2.27/0515-0716/E

For more details, see www.emersonclimate.eu

Connect with us: facebook.com/EmersonClimateEurope

Emerson Climate Technologies - European Headquarters - Pascalstrasse 65 - 52076 Aachen, Germany
Tel. +49 (0) 2408 929 0 - Fax: +49 (0) 2408 929 570 - Internet: www.emersonclimate.eu

EMERSON™
Climate Technologies

The Emerson Climate Technologies logo is a trademark and service mark of Emerson Electric Co. Emerson Climate Technologies Inc. is a subsidiary of Emerson Electric Co. Copeland is a registered trademark and Copeland Scroll is a trademark of Emerson Climate Technologies Inc.. All other trademarks are property of their respective owners. Emerson Climate Technologies GmbH shall not be liable for errors in the stated capacities, dimensions, etc., as well as typographic errors. Products, specifications, designs and technical data contained in this document are subject to modification by us without prior notice. Illustrations are not binding.
© 2015 Emerson Climate Technologies, Inc.

EMERSON. CONSIDER IT SOLVED.™